OPERATOR'S MANUAL

115 mm (4-1/2 pulg.) ANGLE GRINDER

R1000

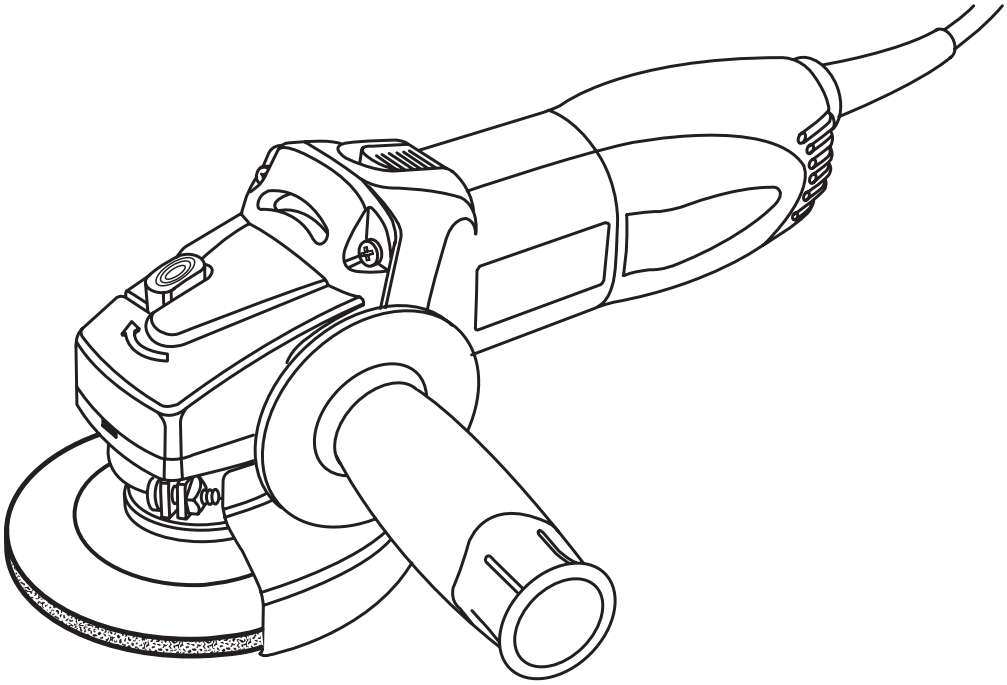

Your angle grinder has been engineered and manufactured to our high standards for dependability, ease of operation, and operator safety. When properly cared for, it will give you years of rugged, trouble-free performance.

⚠ WARNING:

To reduce the risk of injury, the user must read and understand the operator's manual before using this product.

Thank you for buying a RIDGID product.

SAVE THIS MANUAL FOR FUTURE REFERENCE

TABLE OF CONTENTS

- Introduction 2
- General Safety Rules 3-4
- Specific Safety Rules 4
- Symbols 5
- Specifications 6
- Electrical 6
- Unpacking 7
- Applications 7
- Features 8-9
- Assembly 10-11
- Adjustments 12
- Operation 13-14
- Maintenance 15
- Warranty 19
- Customer Service Information 20

INTRODUCTION

Your angle grinder has many features for making the use of this product more pleasant and enjoyable. Safety, performance, and dependability have been given top priority in the design of this product making it easy to maintain and operate.

WARNING:
Do not attempt to use this product until you thoroughly read and completely understand the operator's manual. Pay close attention to the safety rules, including Dangers, Warnings, and Cautions. If you use your product properly and only as intended, you will enjoy years of safe, reliable service.

Look for this symbol to point out important safety precautions. It means attention!!! Your safety is involved.

WARNING:
The operation of any tool can result in foreign objects being thrown into your eyes, which can result in severe eye damage. Before beginning operation, always wear safety goggles or safety glasses with side shields and a full face shield when needed. We recommend Wide Vision Safety Mask for use over eyeglasses or standard safety glasses with side shields. Always wear eye protection which is marked to comply with ANSI Z87.1.

GENERAL SAFETY RULES

⚠ WARNING:
Read and understand all instructions. Failure to follow all instructions listed below, may result in electric shock, fire and/or serious personal injury.

Save These Instructions

Work Area

- **Keep your work area clean and well lit.** Cluttered benches and dark areas invite accidents.
- **Do not operate power tools in explosive atmospheres, such as in the presence of flammable liquids, gases, or dust.** Power tools create sparks which may ignite the dust or fumes.
- **Keep bystanders, children, and visitors away while operating a power tool.** Distractions can cause you to lose control.

Electrical Safety

- **Double insulated tools are equipped with a polarized plug (one blade is wider than the other). This plug will fit in a polarized outlet only one way. If the plug does not fit fully in the outlet, reverse the plug. If it still does not fit, contact a qualified electrician to install a polarized outlet. Do not change the plug in any way.** Double insulation ⧈ eliminates the need for the three-wire grounded power cord and grounded power supply system.
- **Avoid body contact with grounded surfaces such as pipes, radiators, ranges, and refrigerators.** There is an increased risk of electric shock if your body is grounded.
- **Don't expose power tools to rain or wet conditions.** Water entering a power tool will increase the risk of electric shock.
- **Do not abuse the cord. Never use the cord to carry the tools or pull the plug from an outlet. Keep cord away from heat, oil, sharp edges, or moving parts. Replace damaged cords immediately.** Damaged cords increase the risk of electric shock.
- **When operating a power tool outside, use an outdoor extension cord marked "W-A" or "W".** These cords are rated for outdoor use and reduce the risk of electric shock.

Personal Safety

- **Stay alert, watch what you are doing and use common sense when operating a power tool. Do not use tool while tired or under the influence of drugs, alcohol, or medication.** A moment of inattention while operating power tools may result in serious personal injury.
- **Dress properly. Do not wear loose clothing or jewelry. Contain long hair. Keep your hair, clothing, and gloves away from moving parts.** Loose clothes, jewelry, or long hair can be caught in moving parts.
- **Avoid accidental starting. Be sure switch is off before plugging in.** Carrying tools with your finger on the switch or plugging in tools that have the switch on invites accidents.
- **Remove adjusting keys or wrenches before turning the tool on.** A wrench or a key that is left attached to a rotating part of the tool may result in personal injury.
- **Do not overreach. Keep proper footing and balance at all times.** Proper footing and balance enables better control of the tool in unexpected situations.
- **Use safety equipment. Always wear eye protection.** Dust mask, nonskid safety shoes, hard hat, or hearing protection must be used for appropriate conditions.
- **Do not wear loose clothing or jewelry. Contain long hair.** Loose clothes, jewelry, or long hair can be drawn into air vents.
- **Do not use on a ladder or unstable support.** Stable footing on a solid surface enables better control of the tool in unexpected situations.

Tool Use and Care

- **Use clamps or other practical way to secure and support the workpiece to a stable platform.** Holding the work by hand or against your body is unstable and may lead to loss of control.
- **Do not force tool. Use the correct tool for your application.** The correct tool will do the job better and safer at the rate for which it is designed.
- **Do not use tool if switch does not turn it on or off.** Any tool that cannot be controlled with the switch is dangerous and must be repaired.
- **Disconnect the plug from power source before making any adjustments, changing accessories, or storing the tool.** Such preventive safety measures reduce the risk of starting the tool accidentally.
- **Store idle tools out of the reach of children and other untrained persons.** Tools are dangerous in the hands of untrained users.
- **Maintain tools with care. Keep cutting tools sharp and clean.** Properly maintained tools with sharp cutting edges are less likely to bind and are easier to control.
- **Check for misalignment or binding of moving parts, breakage of parts, and any other condition that may affect the tool's operation. If damaged, have the tool serviced before using.** Many accidents are caused by poorly maintained tools.
- **Use only accessories that are recommended by the manufacturer for your model.** Accessories that may be suitable for one tool, may become hazardous when used on another tool.
- **Keep the tool and its handle dry, clean and free from oil and grease.** Always use a clean cloth when cleaning. Never use brake fluids, gasoline, petroleum-based products, or any strong solvents to clean your tool. Following this rule will reduce the risk of loss of control and deterioration of the enclosure plastic.

GENERAL SAFETY RULES

Service

- **Tool service must be performed only by qualified repair personnel.** Service or maintenance performed by unqualified personnel could result in a risk of injury.
- **When servicing a tool, use only identical replacement parts. Follow instructions in the Maintenance section of this manual.** Use of unauthorized parts or failure to follow Maintenance Instructions may create a risk of electric shock or injury.

SPECIFIC SAFETY RULES

- **Always use proper guard with grinding wheel.** A guard protects operator from broken wheel fragments.
- **Accessories must be rated for at least the speed recommended on the tool warning label.** Wheels and other accessories running over rated speed can fly apart and cause injury.

  Hold tool by insulated gripping surfaces when performing an operation where the cutting tool may contact hidden wiring or its own cord. Contact with a "live" wire will make exposed metal parts of the tool "live" and shock the operator.

Additional Safety Rules

- **Know your power tool. Read operator's manual carefully. Learn its applications and limitations, as well as the specific potential hazards related to this tool.** Following this rule will reduce the risk of electric shock, fire, or serious injury.
- **Always wear safety glasses. Everyday eyeglasses have only impact-resistant lenses; they are NOT safety glasses. Following this rule will reduce the risk of serious personal injury.**
- **Protect your lungs. Wear a face or dust mask if the operation is dusty. Following this rule will reduce the risk of serious personal injury.**
- **Protect your hearing. Wear hearing protection during extended periods of operation. Following this rule will reduce the risk of serious personal injury.**
- **Inspect tool cords periodically and, if damaged, have repaired at your nearest Authorized Service Center. Constantly stay aware of cord location.** Following this rule will reduce the risk of electric shock or fire.
- **Check damaged parts. Before further use of the tool, a guard or other part that is damaged should be carefully checked to determine that it will operate properly and perform its intended function. Check for alignment of moving parts, binding of moving parts, breakage of parts, mounting, and any other conditions that may affect its operation. A guard or other part that is damaged should be properly repaired or replaced by an authorized service center.** Following this rule will reduce the risk of shock, fire, or serious injury.
- **Do not abuse cord. Never carry the tool by the cord or yank it to disconnect it from the receptacle.** Keep cord away from heat, oil, and sharp edges. Following this rule will reduce the risk of electric shock or fire.
- **Make sure your extension cord is in good condition. When using an extension cord, be sure to use one heavy enough to carry the current your product will draw. A wire gage size (A.W.G.) of at least 16 is recommended for an extension cord 50 feet or less in length. A cord exceeding 100 feet is not recommended. If in doubt, use the next heavier gage. The smaller the gage number, the heavier the cord.** An undersized cord will cause a drop in line voltage resulting in loss of power and overheating.
- **Inspect for and remove all nails from lumber before using this tool.** Following this rule will reduce the risk of serious personal injury.
- **Drugs, alcohol, medication. Do not operate tool while under the influence of drugs, alcohol, or any medication.** Following this rule will reduce the risk of electric shock, fire, or serious personal injury.
- **Save these instructions.** Refer to them frequently and use them to instruct others who may use this tool. If you loan someone this tool, loan them these instructions also.

⚠ WARNING:

Some dust created by power sanding, sawing, grinding, drilling, and other construction activities contains chemicals known to cause cancer, birth defects or other reproductive harm. Some examples of these chemicals are:

- lead from lead-based paints,
- crystalline silica from bricks and cement and other masonry products, and
- arsenic and chromium from chemically-treated lumber.

Your risk from these exposures varies, depending on how often you do this type of work. To reduce your exposure to these chemicals: work in a well ventilated area, and work with approved safety equipment, such as those dust masks that are specially designed to filter out microscopic particles.

SAVE THESE INSTRUCTIONS

SYMBOLS

Important: Some of the following symbols may be used on this tool. Please study them and learn their meaning. Proper interpretation of these symbols will allow you to operate the tool better and safer.

SYMBOL	NAME	DESIGNATION/EXPLANATION
V	Volts	Voltage
A	Amperes	Current
Hz	Hertz	Frequency (cycles per second)
W	Watt	Power
min	Minutes	Time
∿	Alternating Current	Type of current
⎓	Direct Current	Type or a characteristic of current
no	No Load Speed	Rotational speed, at no load
⧈	Class II Construction	Double-insulated construction
.../min	Per Minute	Revolutions, strokes, surface speed, orbits etc., per minute
⚠	Safety Alert	Precautions that involve your safety
	Lire le manuel d'utilisation	To reduce the risk of injury, the user must read and understand the operator's manual before using this product.
	Eye Protection	Always wear safety goggles or safety glasses with side shields and a full face shield when operating this product.
	Wet Conditions Alert	Do not expose to rain or use in damp locations.

The purpose of safety symbols is to attract your attention to possible dangers. The safety symbols, and the explanations with them, deserve your careful attention and understanding. The safety warnings do not by themselves eliminate any danger. The instructions or warnings they give are not substitutes for proper accident prevention measures.

SYMBOL	MEANING
⚠	**DANGER:** Indicates an imminently hazardous situation, which, if not avoided, will result in death or serious injury.
⚠	**WARNING:** Indicates a potentially hazardous situation, which, if not avoided, could result in death or serious injury.
⚠	**CAUTION:** Indicates a potentially hazardous situation, which, if not avoided, may result in minor or moderate injury. It may also be used to alert against unsafe practices that may cause property damage.
Note:	Advises you of additional information concerning the operation or maintenance of the equipment.

SPECIFICATIONS

Grinding Wheel Capacity..... 4-1/2 in. (115 mm)
Spindle Thread ..... 5/8 x 11 UNC (M14)
No Load Speed 10,000/min
Input ..... 120 Volts, 60 Hz, AC only, 8 Amps
Net Weight..... 4 lbs. (1.8 kg)

ELECTRICAL

Double Insulation

Double insulation is a concept in safety in electric power tools, which eliminates the need for the usual three-wire grounded power cord. All exposed metal parts are isolated from the internal metal motor components with protecting insulation. Double insulated tools do not need to be grounded.

WARNING:
The double insulated system is intended to protect the user from shock resulting from a break in the tool's internal wiring. Observe all normal safety precautions to avoid electrical shock.

Important: Servicing of a tool with double insulation requires extreme care and knowledge of the system and should be performed only by a qualified service technician. For service, we suggest you return the tool to your nearest authorized service center for repair. Always use original factory replacement parts when servicing.

Electrical Connection

The angle grinder has a precision-built electric motor. **It should be connected to a power supply that is 120 volts, 60 Hz, AC only (normal household current).** Do not operate this tool on direct current (DC). A substantial voltage drop will cause a loss of power and the motor will overheat. If your tool does not operate when plugged into an outlet, double-check the power supply.

Extension Cords

When using a power tool at a considerable distance from a power source, be sure to use an extension cord that has the capacity to handle the current the tool will draw. An undersized cord will cause a drop in line voltage, resulting in overheating and loss of power. Use the chart to determine the minimum wire size required in an extension cord. Only round jacketed cords listed by Underwriter's Laboratories (UL) should be used.

When working outdoors with a tool, use an extension cord that is designed for outside use. This type of cord is designated with "WA" on the cord's jacket.

Before using any extension cord, inspect it for loose or exposed wires and cut or worn insulation.

**Ampere rating (on tool faceplate)	0-2.0	2.1-3.4	3.5-5.0	5.1-7.0	7.1-12.0	12.1-16.0
Cord Length	**Wire Size (A.W.G.)**					
25´	**16**	**16**	**16**	**16**	**14**	**14**
50´	**16**	**16**	**16**	**14**	**14**	**12**
100´	**16**	**16**	**14**	**12**	**10**	**—**

***Used on 12 gauge - 20 amp circuit.*

CAUTION:
Keep the extension cord clear of the working area. Position the cord so that it will not get caught on lumber, tools or other obstructions while you are working with a power tool.

UNPACKING

Instructions

Your angle grinder has been shipped completely assembled.

- Carefully remove the tool and accessories from the box.
- Make sure that all items listed in the packing list are included.
- Inspect the tool carefully to make sure no breakage or damage occurred during shipping.
- Do not discard the packing material until you have carefully inspected and satisfactorily operated the tool.
- If any parts are damaged or missing, please call 1-866-539-1710 for assistance.

Packing List

Angle Grinder with Guard

Grinding Disc

Side Handle

Case

Operator's Manual

WARNING:
If any parts are missing do not operate your tool until the missing parts are replaced. Failure to do so could result in possible serious personal injury.

WARNING:
The angle grinder should never be connected to a power supply when you are assembling parts, making adjustments, cleaning, performing maintenance, or when the tool is not in use. Disconnecting the tool will prevent accidental starting that could cause serious injury.

APPLICATIONS

You may use the angle grinder for the purposes listed below:

- Grinding metals.
- Sanding wood or metal surfaces.

FEATURES

Before using the angle grinder, familiarize yourself with all operating features and safety requirements. However, do not let familiarity with the tool make you careless.

⚠ WARNING:
Exercise caution when using the angle grinder. Careless actions, for even a fraction of a second, can result in serious personal injury.

Your new angle grinder is equipped with the following features. *See Figure 1.*

Switch

The angle grinder has a conveniently-located switch.

Long-life Motor

The dust-protected motor with its winding-protection grid and powder-coated coil winding ensures up to 50% longer service life.

Spindle Lock Button

The spindle lock button secures the spindle so that only one wrench is needed to change the grinding wheel.

Guard

A protective guard is provided on your grinder. It deflects sparks and metal chips during use.

⚠ WARNING:
Always use the guard that accompanied the grinder. Comply with mounting and use instructions and warnings found in the manual for the grinder and ANSI B7.1. Failure to heed these warnings can result in wheel breakage and serious personal injury. For more information on ANSI Standards, contact the American National Standards Institute, Inc., 11 West 42nd Street, 13th Floor, New York, NY 10036.

Clutch

The angle grinder is equipped with an automatic clutch. It also the stress load on the motor and gearing. If the clutch is tripped, switch the angle grinder off immediately and solve the problem.

Auto-stop Carbon Brushes

When the auto-stop carbon brushes wear down to a predetermined level, the angle grinder automatically switches off, ruling out the possibility of damage to the armature.

Side Handle

The side handle provided stabilizes your grinder and must be used during all operations. In addition to maintaining safe control during use, the side handle also provides convenient ease of operation for the operator.

Ergonomic Design

The design of the angle grinder provides for easy handling. It is designed for comfort and ease of grasp when operating in different positions and at different angles.

FEATURES

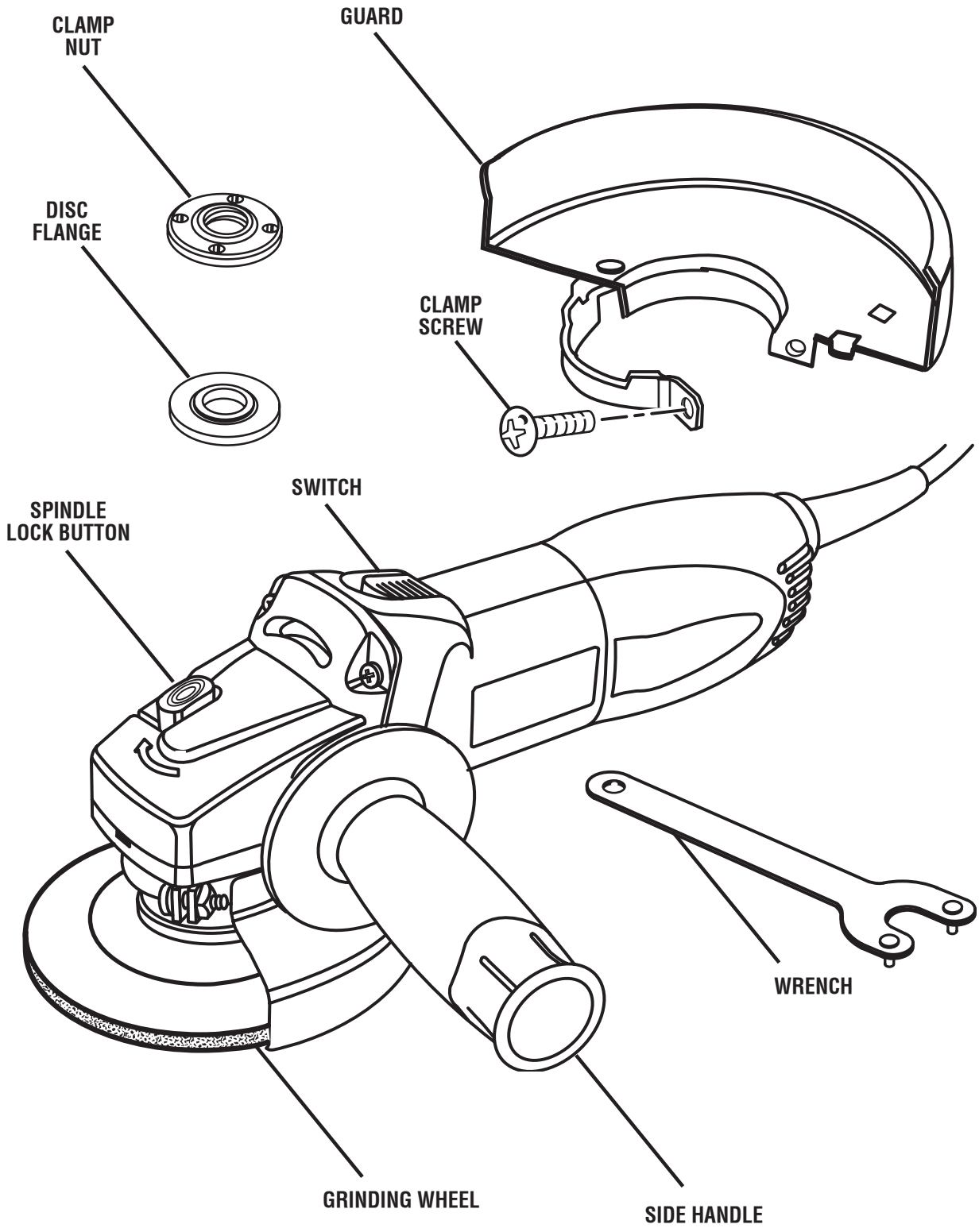

Fig. 1

ASSEMBLY

WARNING:
The angle grinder should never be connected to a power supply when you are assembling parts, making adjustments, cleaning, performing maintenance, or when the tool is not in use. Disconnecting the tool will prevent accidental starting that could cause serious injury.

Attaching the Side Handle

See Figure 2.

Follow these steps to attach the side handle.

- Unplug the grinder.
- Screw the handle into the side of the gear housing.

  Note: You can install the handle on either the left or right side of the grinder, depending on operator preference. It must always be used to prevent loss of control and possible serious injury.
- Tighten the side handle securely.

Installing Wheels

See Figures 3a and 3b.

WARNING:
Thoroughly inspect a new grinding wheel before you install it on the grinder.

- Tap lightly around the wheel using a wooden hammer.
- Listen carefully to the resulting sounds. Places with fissures or cracks will result in a different sound.

Do not use a wheel containing fissures or cracks.

When you install a new grinding wheel, carry out a no load revolution test of approximately one minute with the grinding wheel facing a safe direction, i.e., away from people or objects.

Follow these steps to install wheels.

- Unplug the grinder.

  Note: The grinder is shipped with the flange and clamp nut attached to the spindle.
- Depress the spindle lock button and rotate the clamp nut until the spindle locks.

  Note: To prevent damage to the spindle or spindle lock, always allow motor to come to a complete stop before engaging spindle lock.
- Loosen and remove the clamp nut from the spindle. Do not remove the flange.
- Make sure the flats on the bottom of the flange are engaged with the flats on the spindle.
- Choose one of these options:
  - *Install grinding wheel:* Place the grinding wheel over the spindle. Thread the clamp nut on the spindle with the flat side of the nut facing up. Fit the raised, small diameter portion of the clamp nut into the hole in the wheel and finger tighten.

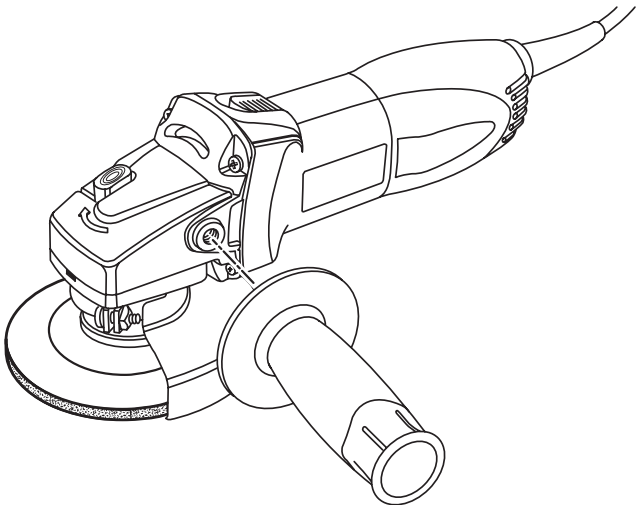

Fig. 2

- To install optional flap disc (sold separately): Place the flap disc over the spindle. Thread the clamp nut on the spindle with the flat side of the nut facing up. Fit the raised, small diameter portion of the clamp nut into the hole in the wheel and finger tighten.

WARNING:
Always install a grinding wheel with the depressed center against the flange. Failure to do so will cause the grinding wheel to crack when tightening the clamp nut . This could result in serious personal injury because of loose particles breaking off and being thrown from the grinder. Do not overtighten.

- Depress the spindle lock button and rotate the wheel clockwise until the spindle locks in position.
- Tighten the clamp nut securely with the wrench provided. Do not overtighten.

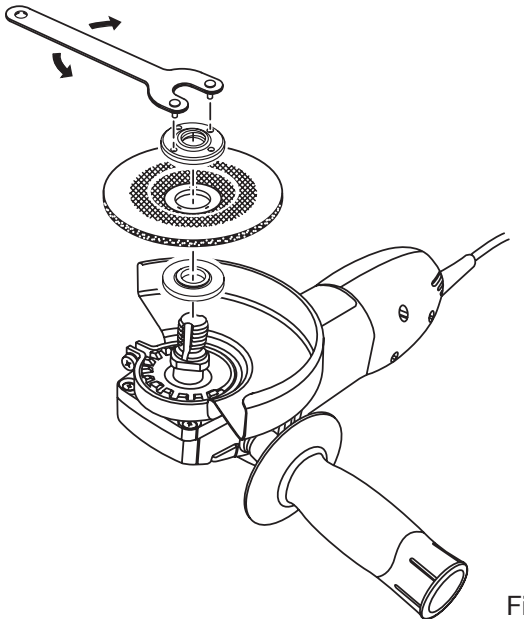

Fig. 3a

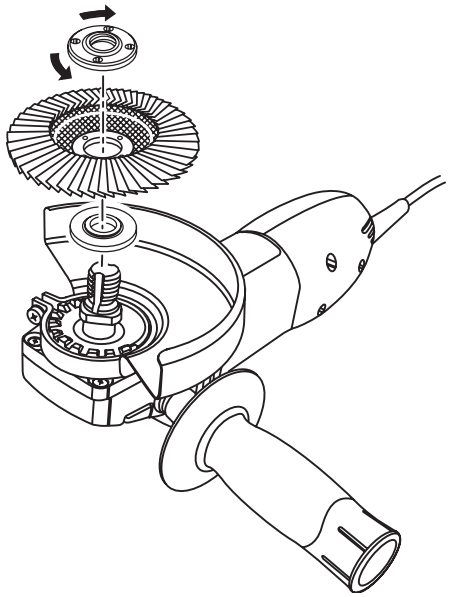

Fig. 3b

ADJUSTMENTS

WARNING:
The angle grinder should never be connected to a power supply when you are assembling parts, making adjustments, cleaning, performing maintenance, or when the tool is not in use. Disconnecting the tool will prevent accidental starting that could cause serious injury.

Adjusting the Guard

See Figures 4, 5, and 6.

The guard on your grinder should be correctly installed depending on which side the handle is mounted. **Never use your grinder without the guard correctly in place.**

WARNING:
Never place the guard so that it is on front of the grinder as shown in Figure 6. This could result in serious injury because sparks and loose particles thrown from the grinding wheel would be directed toward the operator. Always place the guard in the correct location as shown.

Follow these steps to adjust the guard.

- Unplug the grinder.
- Loosen the clamp screw until you can remove the guard.
- Rotate the guard to its correct position as shown.
- Tighten the clamp screw securely.

  Note: Be sure the raised ridge on the guard is seated in the groove on the bearing cap. Never use the grinder without the guard in place and properly adjusted.

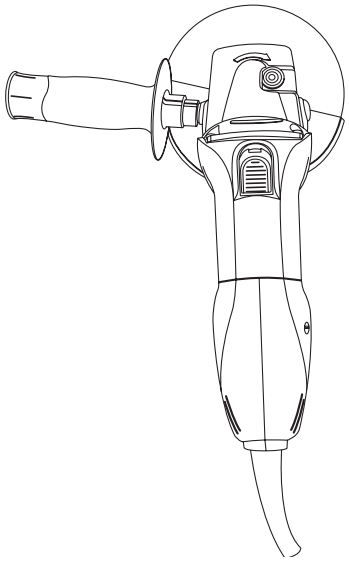

Fig. 4

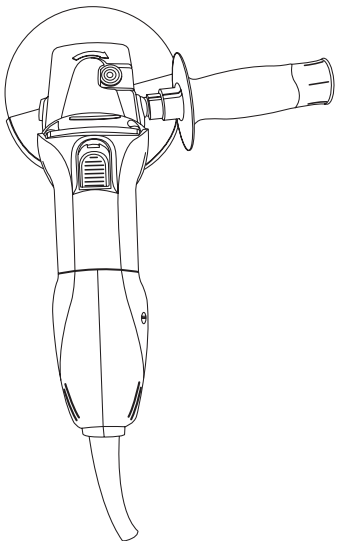

Fig. 5

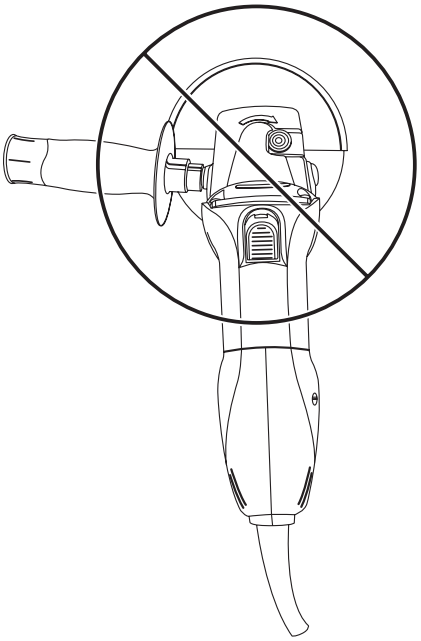

Fig. 6

WARNING:
Always wear safety goggles or safety glasses with side shields when operating this tool. Failure to do so could result in dust, shavings, or loose particles being thrown into your eyes, resulting in possible serious injury.

DANGER:
Never attach a wood cutting or carving blade of any type to this angle grinder. It is only designed for grinding and sanding. Use for any other purpose is not recommended and creates a hazard, which will result in serious injury.

Turning On/Off the Grinder

See Figure 7.

Follow these steps to turn on/off the grinder.

- Turn on the grinder: Slide the switch forward until it locks into place.
- Turn off the grinder: Depress the back of the switch.

Operating the Grinder

See Figure 8.

Always carefully select and use grinding wheels that are recommended for the material to be ground. Make sure that the minimum operating speed of any accessory wheel selected is not less than 10,000/min. The grinding wheel provided with your grinder is suitable for grinding welds, preparing surfaces to be welded, grinding structural steel, and grinding stainless steel.

Follow these steps to operate the grinder.

- Secure all work in a vise or clamp to a workbench.

DANGER:
Never use your grinder with the guard removed. It has been designed for use only with the guard installed. Attempting to use grinder with guard removed will result in loose particles being thrown against the operator resulting in serious personal injury.

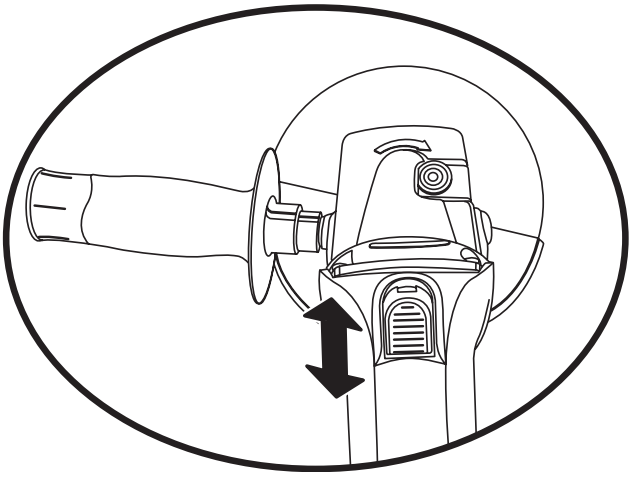

Fig. 7

- Hold the grinder in front and away from you with both hands, keeping the grinding wheel clear of the workpiece.
- Turn on the grinder and let the motor and grinding wheel build up to full speed.
- Lower the grinder gradually until the grinding wheel contacts the workpiece.
- Keep the grinder tilted at an angle from 5 to 15 degrees.

WARNING:
To prevent loss of control and possible serious personal injury, always operate the grinder with both hands, keeping one hand on the side handle.

- Move the grinder continuously, at a steady, consistent pace.

CAUTION:
If the grinder is held in one spot too long, it will gouge and cut grooves in the workpiece. If the grinder is held at too sharp an angle, it will also gouge the workpiece because of concentration of pressure on a small area.

- Use just enough pressure to keep the grinder from chattering or bouncing.

CAUTION:
Heavy pressure will decrease the grinder's speed and put a strain on the motor.

Note: Normally the weight of the tool alone is adequate for most grinding jobs. Use light pressure when grinding jagged edges or loose bolts where there is the potential for the grinder to snag on the metal edge.

- Lift the grinder away from the workpiece before turning off the grinder.

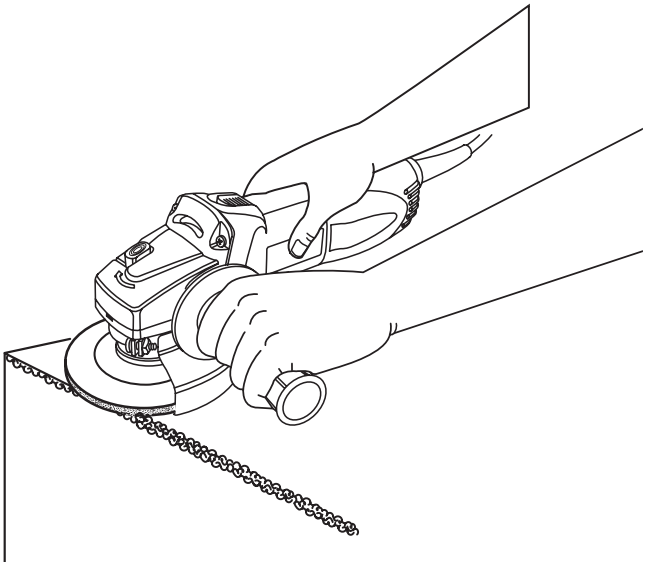

Fig. 8

WARNING:
When servicing use only identical Ridgid replacement parts. Use of any other parts may create a hazard or cause product damage.

WARNING:
The angle grinder should never be connected to a power supply when you are assembling parts, making adjustments, cleaning, performing maintenance, or when the tool is not in use. Disconnecting the tool will prevent accidental starting that could cause serious injury.

General

Avoid using solvents when cleaning plastic parts. Most plastics are susceptible to damage from various types of commercial solvents and may be damaged by their use. Use clean cloths to remove dirt, carbon dust, etc.

WARNING:
Do not at any time let brake fluids, gasoline, petroleum-based products, penetrating oils, etc. come in contact with plastic parts. They contain chemicals that can damage, weaken, or destroy plastic.

Electric tools used on fiberglass material, wallboard, spackling compounds, or plaster are subject to accelerated wear and possible premature failure because the fiberglass chips and grindings are highly abrasive to bearings, brushes, commutators, etc. Consequently, we do not recommended using this tool for extended work on these types of materials. However, if you do work with any of these materials, it is extremely important to clean the tool using compressed air.

WARNING:
Always wear safety goggles or safety glasses with side shields during power tool operation or when blowing dust. If operation is dusty, also wear a dust mask.

Lubrication

All of the bearings in this tool are lubricated with a sufficient amount of high grade lubricant for the life of the tool under normal operating conditions. Therefore, no further lubrication is required.

Replacing the Guard

See Figure 9.

After extended use, the guard may wear and need replacing. If you drop your grinder and damage the guard it may also be necessary for you to replace it.

Follow these steps to replace the guard.

- Unplug the grinder.

WARNING:
Failure to unplug your grinder could result in accidental starting causing serious injury.

- Depress spindle lock button and rotate clamp nut until spindle locks.
- Loosen and remove clamp nut from spindle using the wrench provided.
- Remove grinding wheel and disc flange.
- Loosen the clamp screw until you can remove the guard from the bearing cap.
- Place the new guard on the shoulder of the bearing cap.

  Note: If the new guard will not fit, loosen the clamp screw until they slide over the bearing cap.
- Rotate guard to the correct position as shown.

  Note: Be sure the raised ridge on the guard is seated in the groove on the bearing cap.
- Tighten clamp screw securely.
- Reassemble disc flange, grinding wheel, and clamp nut. Refer to “Installing Accessory Wheels” earlier in this manual.
- Tighten the clamp nut securely with the wrench provided.

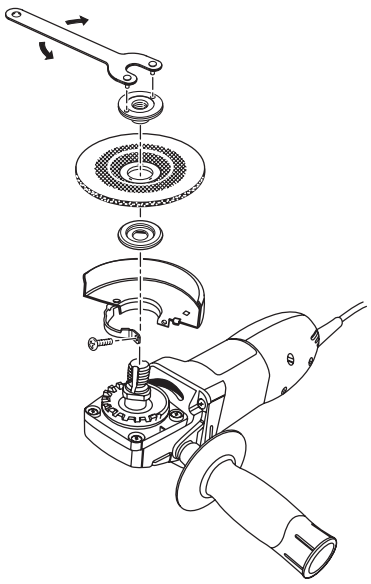

Fig. 9

NOTES

NOTES

NOTES

WARRANTY

RIDGID® HAND HELD AND STATIONARY POWER TOOL LIMITED THREE YEAR WARRANTY AND 90-DAY SATISFACTION GUARANTEE POLICY

This product is manufactured by One World Technologies, Inc., under a trademark license from Ridgid, Inc. All warranty communications should be directed to One World Technologies, Inc., attn: RIDGID handheld and stationary power tool technical service at (toll free) 1-866-539-1710.

90-DAY SATISFACTION GUARANTEE POLICY

During the first 90 days after the date of purchase, if you are dissatisfied with the performance of this RIDGID tool for any reason you may return the tool to the dealer from which it was purchased for a full refund or exchange. To receive a replacement tool you must present proof of purchase and return all original equipment packaged with the original product. The replacement tool will be covered by the limited warranty for the balance of the three year warranty period.

WHAT IS COVERED UNDER THE LIMITED THREE YEAR WARRANTY

This warranty covers all defects in workmanship or materials in this RIDGID tool for the three year period from the date of purchase. This warranty is specific to this tool. Warranties for other RIDGID products may vary.

HOW TO OBTAIN SERVICE

To obtain service for this RIDGID tool you must return it, freight prepaid, to an authorized RIDGID service center for hand held and stationary power tools. You may obtain the location of the authorized service center nearest you by calling (toll free) 1-866-539-1710 or by logging on to the RIDGID website at www.ridgid.com. When requesting warranty service, you must present the proof of purchase documentation, which includes a date of purchase. The authorized service center will repair any faulty workmanship, and either repair or replace any defective part, at our option at no charge to you.

WHAT IS NOT COVERED

This warranty applies only to the original purchaser at retail and may not be transferred. This warranty only covers defects arising under normal usage and does not cover any malfunction, failure or defect resulting from misuse, abuse, neglect, alteration, modification or repair by other than an authorized service center for RIDGID branded hand held and stationary power tools. **RIDGID, INC. AND ONE WORLD TECHNOLOGIES, INC. MAKE NO WARRANTIES, REPRESENTATIONS OR PROMISES AS TO THE QUALITY OR PERFORMANCE OF ITS POWER TOOLS OTHER THAN THOSE SPECIFICALLY STATED IN THIS WARRANTY.**

ADDITIONAL LIMITATIONS

To the extent permitted by applicable law, all implied warranties, including warranties of MERCHANTABILITY or FITNESS FOR A PARTICULAR PURPOSE, are disclaimed. Any implied warranties, including warranties of merchantability or fitness for a particular purpose, that cannot be disclaimed under state law are limited to three years from the date of purchase. One World Technologies, Inc. is not responsible for direct, indirect, incidental or consequential damages. Some states do not allow limitations on how long an implied warranty lasts and/or do not allow the exclusion or limitation of incidental or consequential damages, so the above limitations may not apply to you. This warranty gives you specific legal rights, and you may also have other rights which vary from state to state.

One World Technologies, Inc.
Hwy. 8
Pickens, SC 29671

OPERATOR'S MANUAL

115 mm (4-1/2 pulg.) ANGLE GRINDER

R1000

Customer Service Information

For parts or service, contact your nearest Ridgid authorized service center. Be sure to provide all relevant information when you call or visit. For the location of the authorized service center nearest you, please call 1-866-539-1710 or visit us online at www.ridgid.com.

The model number of this tool is found on a plate attached to the motor housing. Please record the serial number in the space provided below. When ordering repair parts, always give the following information:

Model No. R1000

Serial No. _____

983000-233
3-04